GOLPRETECH
CZECH REPUBLIC

name	Safety chuck – foot mounted

model	GSC-40-SL

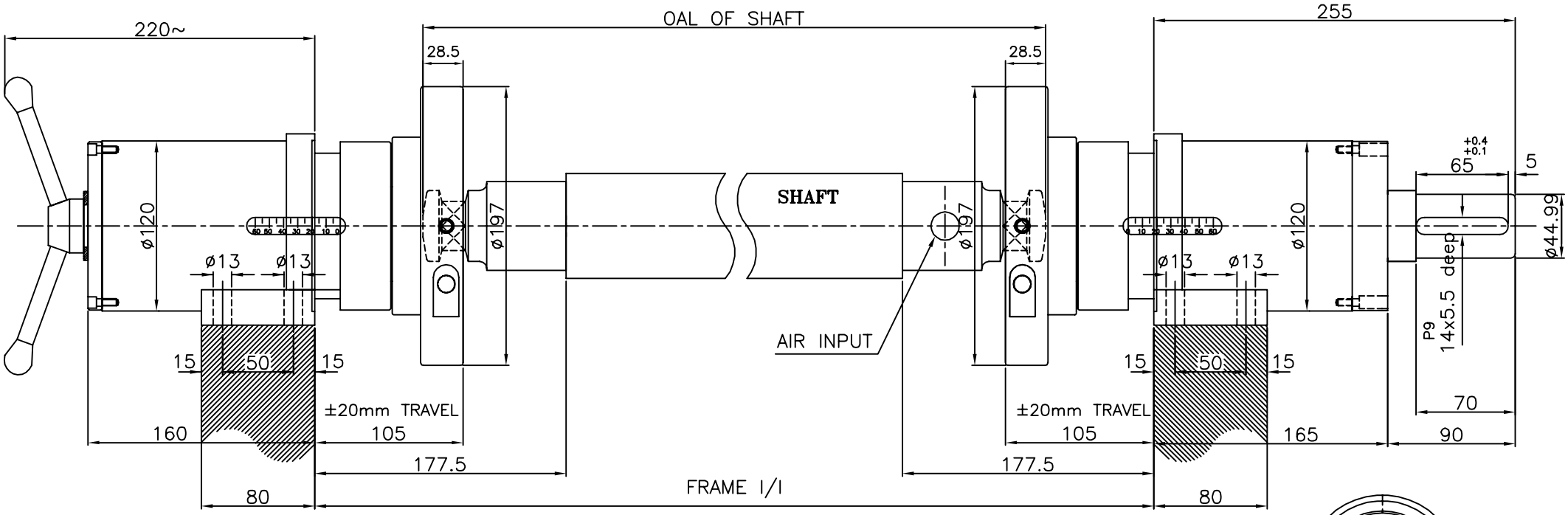

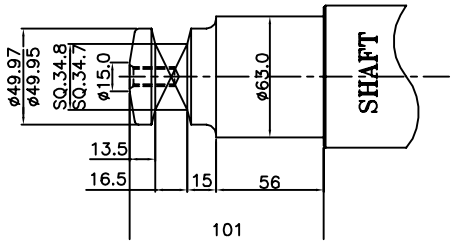

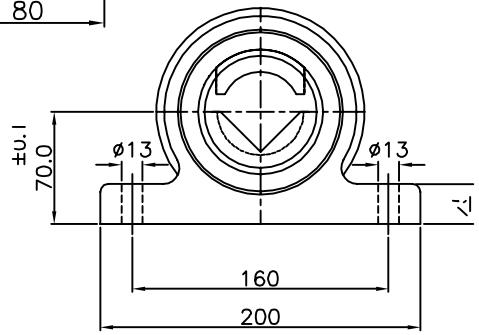

axial adjustment +/- 20 mm (total 40

Max. weight (per pair)	Max. torque	Max. speed	Dimensions of inserts	Drive shaft diameter
1200 kg	-	200 m / min	⌷ 35 mm	Ø max. 45 mm

On request:

www.golpretech.cz